Port size G	Orifice (mm)	Flow factors (L/min) Liquids kv	Qmax	Gases Qn	Admissible differential pressure bar Min	Max DC	Max AC	Fluid temp. °C Gas	Liquid	Oil	Seat disc	Reference numbers Global valve reference	Valve reference no.	Housing	OR Coil	Power consumption (W) DC	AC	Wt. (g)	Dim ref.
1/2	15	65	65	4500	0	-	16	100	75	100	NBR	7221GBG4VN00	221G15	2995	481865	-	8	640	10
	15	65	65	4500	0	-	16	100	75	100	NBR			4270	481000	-	8	760	
	15	65	65	4500	0	7	-	100	75	100	NBR			4270	486265	14	-	770	

Port size G	Orifice (mm)	Flow factors (L/min) kv	Qmax	Admissible differential pressure bar Min	Max DC	Max AC	Fluid temp. °C Water	Steam	Seat disc	Reference numbers Global valve reference	Valve reference no.	Housing	OR Coil	Power consumption (W) DC	AC	Wt. (g)	Dim ref.
1/2	15	65	65	0	-	10	100	-	EPDM	7221GBG4VE00	221G1503	2995	481865	-	8	640	10
	15	65	65	0	-	10	120	-	EPDM	7221GBG4VE00		4270	481000	-	8	760	
	15	65	65	0	7	10	120	-	EPDM	7221GBG4VE00		4270	486265	14	14	770	
	15	65	65	0	4	4	-	140	EPDM	7221GBG4VES0		4270	486265	14	14	770	
	15	65	65	0	4	4	-	140	EPDM	7221GBG4VES0		2995	492425	14	14	650	

Port size G	Orifice (mm)	Flow factors (L/min) Liquids kv	Qmax	Gases Qn	Admissible differential pressure bar Min	Max DC	Max AC	Fluid temp. °C Gas	Liquid	Oil	Seat disc	Reference numbers Global valve reference	Valve reference no.	Housing	OR Coil	Power consumption (W) DC	AC	Wt. (g)	Dim ref.
3/4	15	80	80	6000	0	-	16	100	75	100	NBR	7221GBG51N00	221G16	2995	481865	-	8	670	10
	15	80	80	6000	0	-	16	100	75	100	NBR			4270	481000	-	8	790	
	15	80	80	6000	0	7	-	100	75	100	NBR			4270	486265	14	-	800	

Port size G	Orifice (mm)	Flow factors (L/min) kv	Qmax	Admissible differential pressure bar Min	Max DC	Max AC	Fluid temp. °C Water	Steam	Seat disc	Reference numbers Global valve reference	Valve reference no.	Housing	OR Coil	Power consumption (W) DC	AC	Wt. (g)	Dim ref.
3/4	15	80	80	0	-	10	100	-	EPDM	7221GBG51E00	221G1603	2995	481865	-	8	670	10
	15	80	80	0	-	10	120	-	EPDM	7221GBG51E00		4270	481000	-	8	790	
	15	80	80	0	7	10	120	-	EPDM	7221GBG51E00		4270	486265	14	14	800	
	15	80	80	0	4	4	-	140	EPDM	7221GBG51ES0		4270	486265	14	14	800	
	15	80	80	0	4	4	-	140	EPDM	7221GBG51ES0		2995	492425	14	14	680	

Port size G	Orifice (mm)	Flow factors (L/min) Liquids kv	Qmax	Gases Qn	Admissible differential pressure bar Min	Max DC	Max AC	Fluid temp. °C Gas	Liquid	Oil	Seat disc	Reference numbers Global valve reference	Valve reference no.	Housing	OR Coil	Power consumption (W) DC	AC	Wt. (g)	Dim ref.
1	25	160	160	14000	0	-	16	100	75	100	NBR	7221GBG64N00	221G21	2995	481865	-	8	1170	10
	25	160	160	14000	0	-	16	100	75	100	NBR			4270	481000	-	8	1290	
	25	160	160	14000	0	6	-	100	75	100	NBR			4270	486265	14	-	1300	

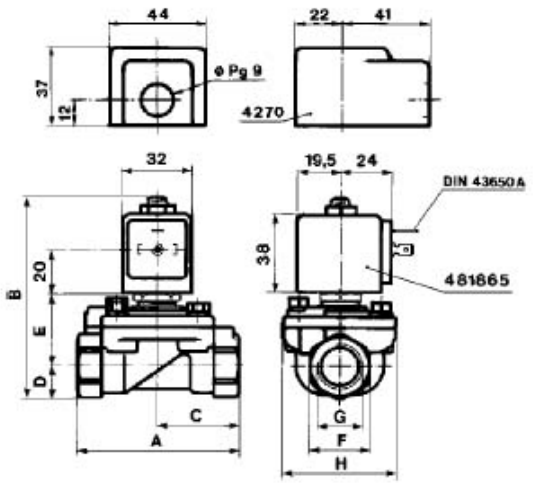

	A mm	B mm	C mm	D mm	E mm	F mm	G inch	H mm
G15	75	93	37.5	15	34	27	1/2	53
G16	80	95.5	40	17.5	34	32	3/4	53
G21	100	108	50	23	41	41	1	70