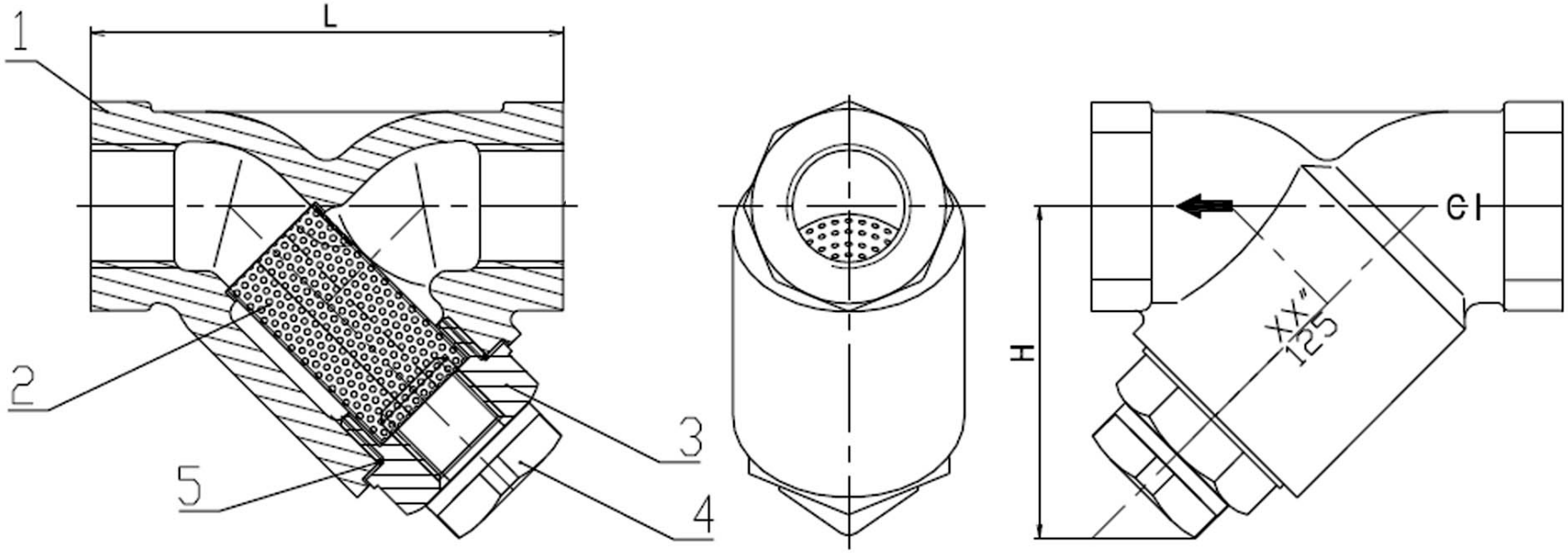

Connect type:BSP F/F

	inch	1/2"	3/4"	1"	1 1/4"	1.5"	2"	2.5"	3"
	mm	15	20	25	32	40	50	65	80
L		76	102	124	130	146	184	229	254
H		64	70	80	88	100	129	139	150

5	6300(50-25)3-0940-0		1	NBR	
4	SCREW		1	steel	
3	6300(50-25)3-1801-0		1	ASTM A126 CL.B	
2	6300(50-25)3-3229-0		1	ASTM A582 304	
1	6300(50-25)3-0101-0		1	ASTM A126 CL.B	

1/2"-3"

6300(50-25)3-0000-0